Transfer or duplication of this doucument as well as the utilisation or communication of its content are not permitted unless express consen is granted. Violations give rise to claims for damages. All rights reserved in case of patent, utility model or design patent registrations.

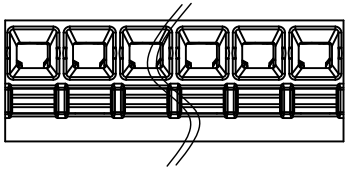

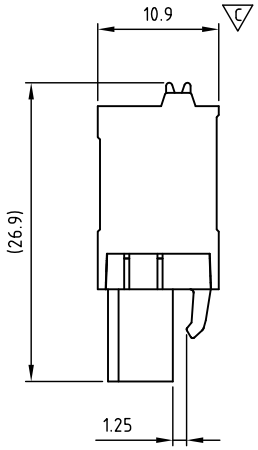

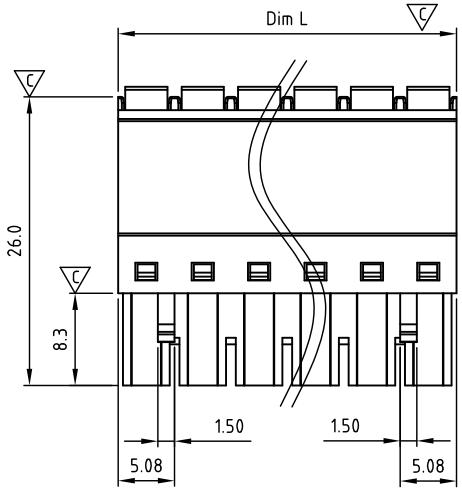

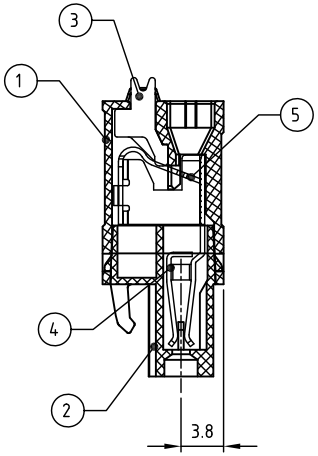

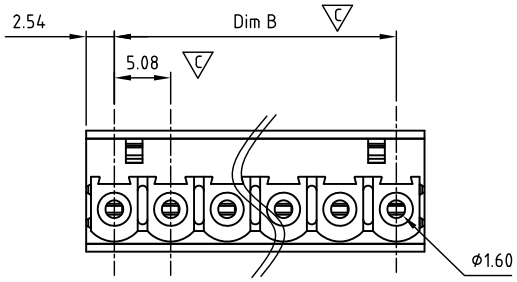

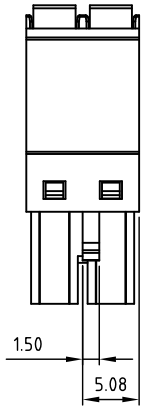

2P WITH HOOK TYPE

Technical data

1.Nominal voltage: 300V/10A (IEC 320V/12A)
PITCH:5.08mm

2.Connection capacity: ⚠
Sol AWG 26-12/Str AWG26-14 (IEC 0.2-2.5mm2)

3.Insulation Withstanding Voltage:
AC 1600V/MIN (IEC AC 2200V/MIN)

4.Insulation Resistance:
1000MΩ or more at DC500V

5.Stripping length: 9-10mm

6Using temperature range:-40C° -115C°

7.Undimen sioned Tolerances:

Dim.L=Px5.08
Dim.B=(P-1)x5.08
P= number of poles

	Dim B	Dim L
0-30mm	±0.15	±0.20
over 30mm-60mm	±0.20	±0.25
over 60mm-90mm	±0.25	±0.30
over 90mm	±0.30	±0.40

Normal Geometric Tolerancing

	— //	⌯
0-100mm	±0.25	±0.30
over 100mm-150mm	±0.30	±0.30
over 150mm	±0.50	±0.30

	⊥
0-10mm	±0.20
over 10mm	±0.30

8.Safety approval:

9.RoHS Compliance

10.Critical dimension: Ⓒ

PASD508 xx x 1xx
①② ③

① Poles 02-24
② Color
0 Black 3 Orange 5 Green 6 Blue 8 Grey.....
③ Custom
100 K MARK 10K KUNACON MARK.....

ITEM	NAME OF PART	MATERIAL	NOTES	Q"TY
5	WIRE GUARD	Stainless steel	t=0.40mm	P
4	CONTACT	BRONZE (PhBz C5210)	t=0.40mm TIN PLATED	P
3	LEVEL	POM	ORANGE	P
2	COVER	PA66 UL94V-0	ALL COLOR	1
1	BODY	PA66 UL94V-0	ALL COLOR	1

REV	SIGN	DESCRIPTION	CHK.	DATE
B	⚠1	Str is changed AWG26-14	WF.Z	10/24'19

DWG.	WF. Zhang	DATE	2019.10.24	UNITS:	MM
CHK.	WF. Zhang	DATE	2019.10.24	SCALE:	NONE 2:1 (:)
APP.		DATE		TITLE:	PA-SD508 Series Plug Ultra thIn type
				PART NO.	PASD508xxx1xx
				DWG NO.	PA-SD508-B201

SHEET: 1 OF 1 REV.: B

Tolerance	
X.	±0.50
X.X	±0.30
X.XX	±0.10
X°	±1°

KUNA Contact Technology Co, Ltd
http://www.kunacon.com