Transfer or duplication of this doucument as well as the utilisation or communication of its content are not permitted unless express consen is granted. Violations give rise to claims for damages. All rights reserved in case of patent, utility model or design patent registrations.

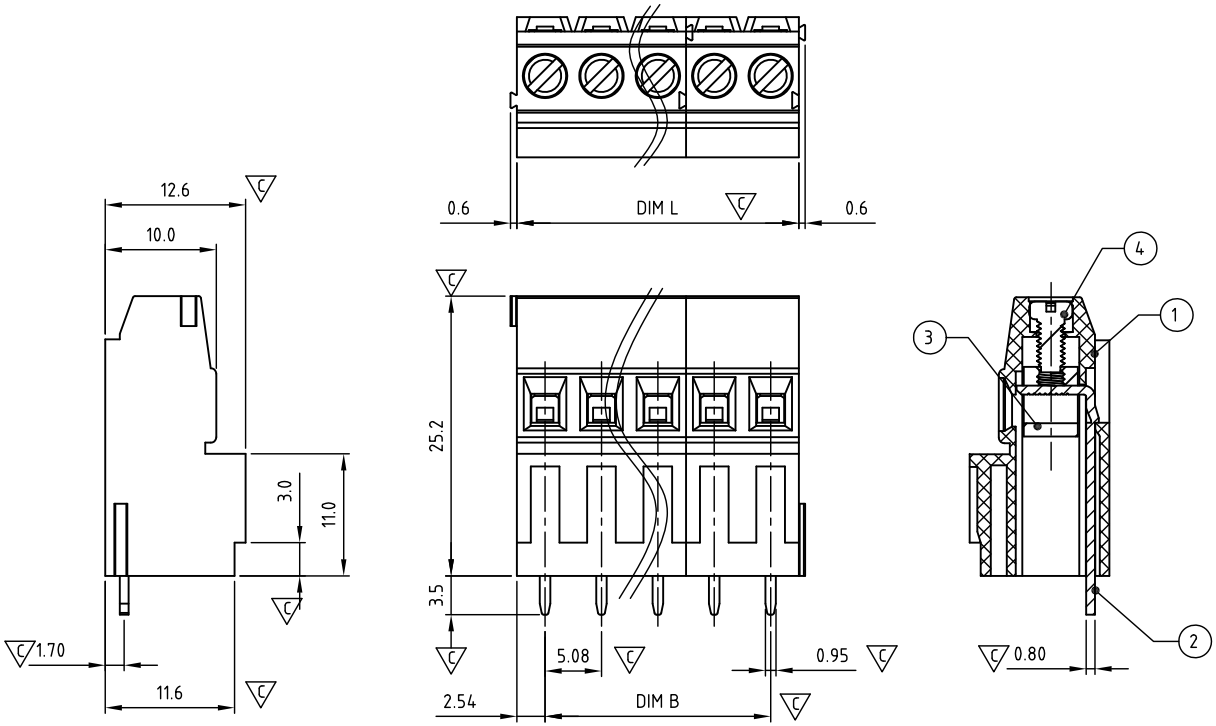

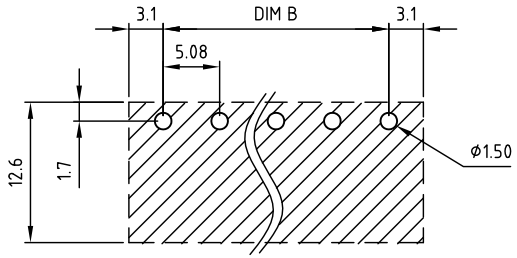

PCB LAYOUT

Technical data

1.Nominal voltage: 300V/15A
PITCH:5.08mm

2.Connection capacity:
AWG 30-12

3.Insulation Withstanding Voltage:
AC 1600V/MIN

4.Insulation Resistance:
1000MΩ or more at DC500V

5.Tightening torque:
4.3Lb-In(5.0kgf.cm / 0.5N.m)

6.Screw thread: M2.5

7.Stripping length: 6-7mm

8.Using temperature range:-40C°~115C°
Soldering temperature:250±10C°/5s

9.Undimen sioned Tolerances:

Dim.L=Px5.08
Dim.B=(P-1)x5.08
P= number of poles (02-24P)

	Dim B	Dim L
0-30mm	±0.15	±0.20
over 30mm-60mm	±0.20	±0.25
over 60mm-90mm	±0.25	±0.30
over 90mm	±0.30	±0.40

10.Safety approval:

11.RoHS Compliance

12.Critical dimension: ▽C

EQHM508 xx x 0xx
①② ③

①Poles 02-24

②Color
0 Black 3 Orange 5 Green 6 Blue G Pale gray.....

③Custom
000 K MARK 00K KUNACON MARK.....

ITEM	NAME OF PART	MATERIAL	NOTES	Q"TY
4	SCREW	STEEL	M2.5×0.45, Zn Plated	P
3	CAGE	BRASS	M2.5×0.45, Ni PLATED	P
2	CONTACT	BRASS	Tin PLATED	P
1	BODY	PA66 UL94V-0		1

DWG.	WF. Zhang	DATE	2019.12.06	UNITS:	MM	SHEET:	1 OF 1
CHK.	WF. Zhang	DATE	2019.12.23	SCALE:	NONE 2:1 (:)	REV.: A	
APP.		DATE		TITLE:	EQ-HM508 Series 2-Interlock 180D "-" Slot Screw		
				PART NO.	EQHM508xxx0xx		
				DWG NO.	EQ-HM508-B001		

Tolerance
X. ±0.50
X.X ±0.30
X.XX ±0.10
X° ±1°

KUNA Contact Technology Co, Ltd
http://www.kunacon.com

REV	SIGN	DESCRIPTION	CHK.	DATE
	△1			