Transfer or duplication of this doucument as well as the utilisation or communication of its content are not permitted unless express consen is granted. Violations give rise to claims for damages. All rights reserved in case of patent, utility model or design patent registrations.

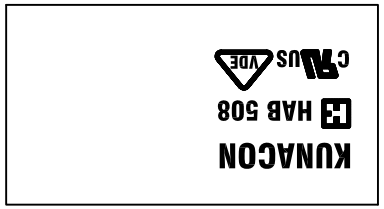

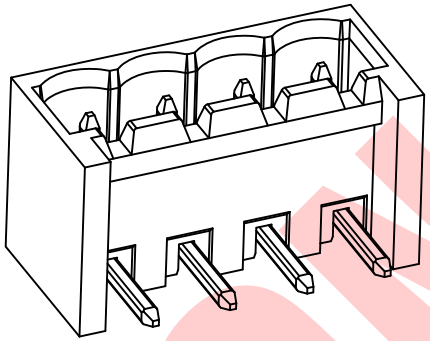

Technical data

1.Nominal voltage: 300V/15A (IEC 250V/12A)
PITCH:5.08mm

2.Insulation Withstanding Voltage:
AC 1600V/MIN / AC 2500V/MIN

3.Insulation Resistance:
1000MΩ or more at DC500V

4.Using temperature range:-40C°~115C°

5.Soldering temperature range:250C°±10C°/5sec

6.Safety approval:

7.RoHS Compliance

8.Critical dimension:

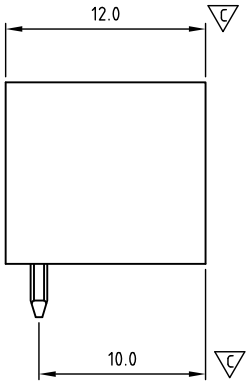

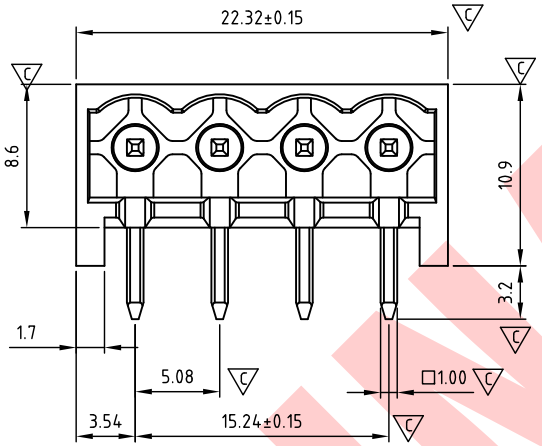

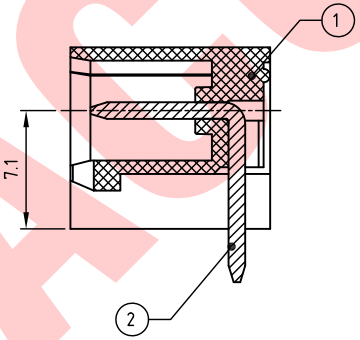

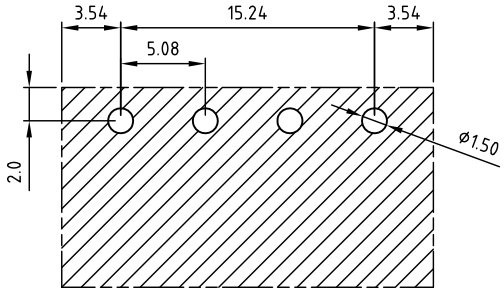

PCB LAYOUT

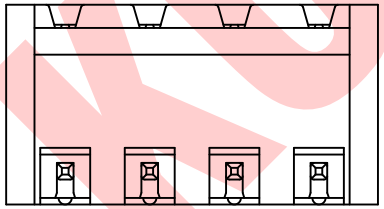

ITEM	NAME OF PART	MATERIAL	NOTES	Q"TY
2	PIN	COPER	TIN PLATED	4
1	BODY	PA66 UL94V-0	BLACK	1

DWG.	WF. Zhang	DATE	2020.10.17	UNITS:	MM	SHEET:	1 OF 1
CHK.	WF. Zhang	DATE	2020.10.17	SCALE:	NONE 3:1 (:)	REV.: A	
APP.		DATE		TITLE:	HA-BH508-90D Series Close type 4p Black 塑胶反向弯针		
				PART NO.	HABH50804021K		
				DWG NO.	HA-B508-B301		

Tolerance	
X.	±0.50
X.X	±0.30
X.XX	±0.10
X°	±1°

KUNA Contact Technology Co, Ltd
http://www.kunacon.com

REV	SIGN	DESCRIPTION	CHK.	DATE
	1			

KUNACON