Transfer or duplication of this doucument as well as the utilisation or communication of its content are not permitted unless express consen is granted. Violations give rise to claims for damages. All rights reserved in case of patent, utility model or design patent registrations.

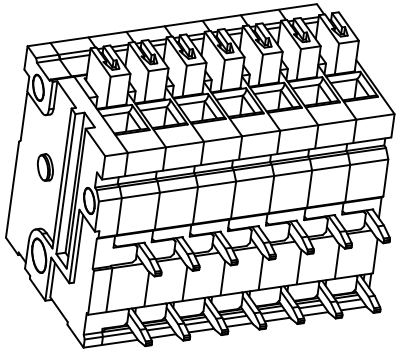

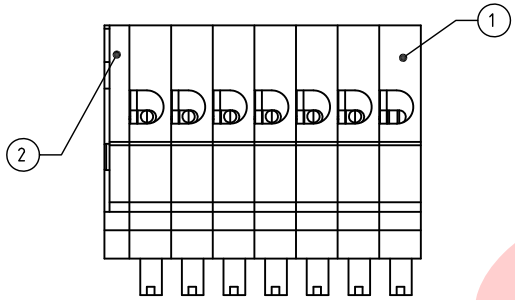

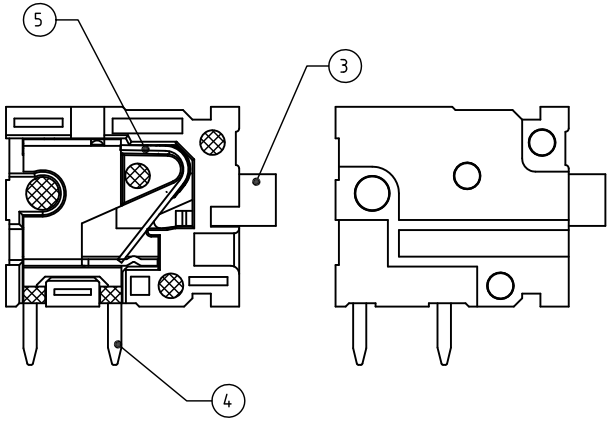

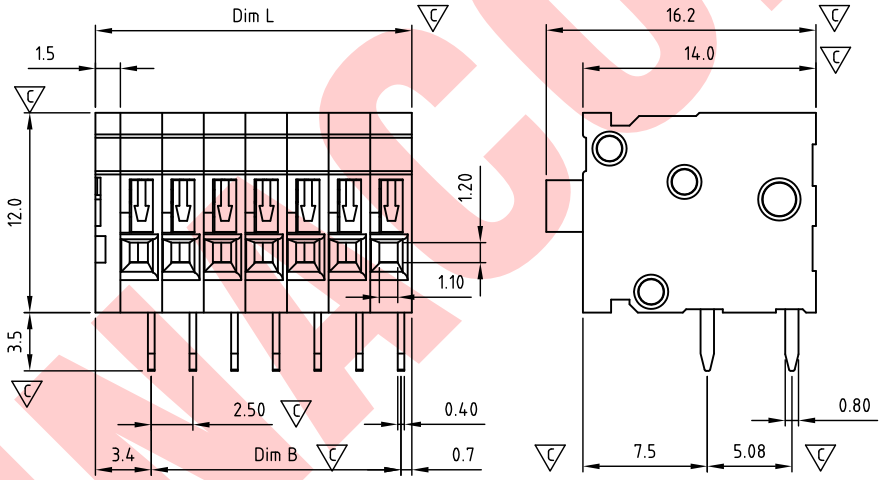

Technical data

1.Nominal voltage: 150V/6A
PITCH:2.5mm
2.Connection capacity:
AWG 26-18
3.Insulation Withstands Voltage:
AC 1300V/MIN
4.Insulation Resistace:
1000MΩor more at DC500V
5.Stripping length: 9-10mm
6.Using temperature range:-40C°~115C°
Soldering temperature:250±10C°/5s
7.Undimen sioned Tolerances:

Dim.L=Px2.5+1.5
Dim.B=(P-1)x2.5
P= number of poles(1-24P)

	Dim B	Dim L
0-30mm	±0.15	±0.20
over 30mm-60mm	±0.20	±0.25
over 60mm-90mm	±0.25	±0.30
over 90mm	±0.30	±0.40

8.Safety approval:
9.RoHS Compliance
10.Critical dimension:

SDHD250 xx x xxx
①②③
①Poles 01-24
②Color
0 Black 5 Green 6 Blue 8 Gray 9 White.....
③Custom
000 "K" logo 00K KUNACON logo

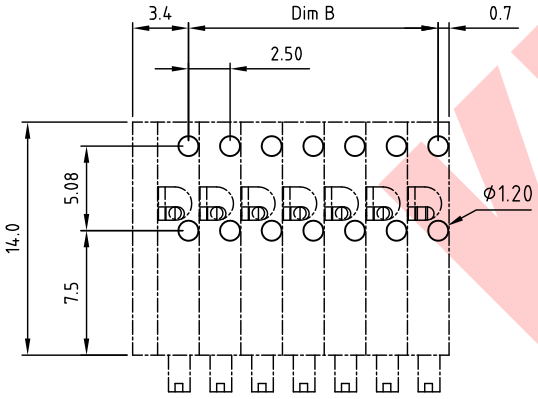

PCB LAYOUT

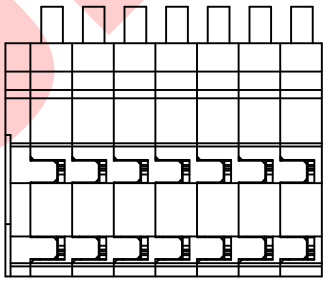

ITEM	NAME OF PART	MATERIAL	NOTES	Q"TY
5	WIRE GUARD	Stainless steel		P
4	CONTACT	BRASS	Tin PLATED	P
3	LEVEL	PA66 UL94V-0	White Color	P
2	End COVER	PA66 UL94V-0	ALL COLOR	1
1	BODY	PA66 UL94V-0	ALL COLOR	P

DWG.	WF. Zhang	DATE	2017.07.27	UNITS:	MM	SHEET:	1 OF 1
CHK.	WF. Zhang	DATE	2017.09.06	SCALE:	NONE 3:1 (:)	REV.: A	
APP.		DATE		TITLE:	SD-HD250 Series 180D wire inlet (Horizontal) 双排平行脚		
				PART NO.	SDHD250xxxxxx		
				DWG NO.	SD-HD250-B001		

Tolerance

X.	±0.50
X.X	±0.30
X.XX	±0.10
X°	±1°

KUNA Contact Technology Co, Ltd
http://www.kunacon.com

SIGN	DESCRIPTION	CHK.	DATE
1			

KUNACON