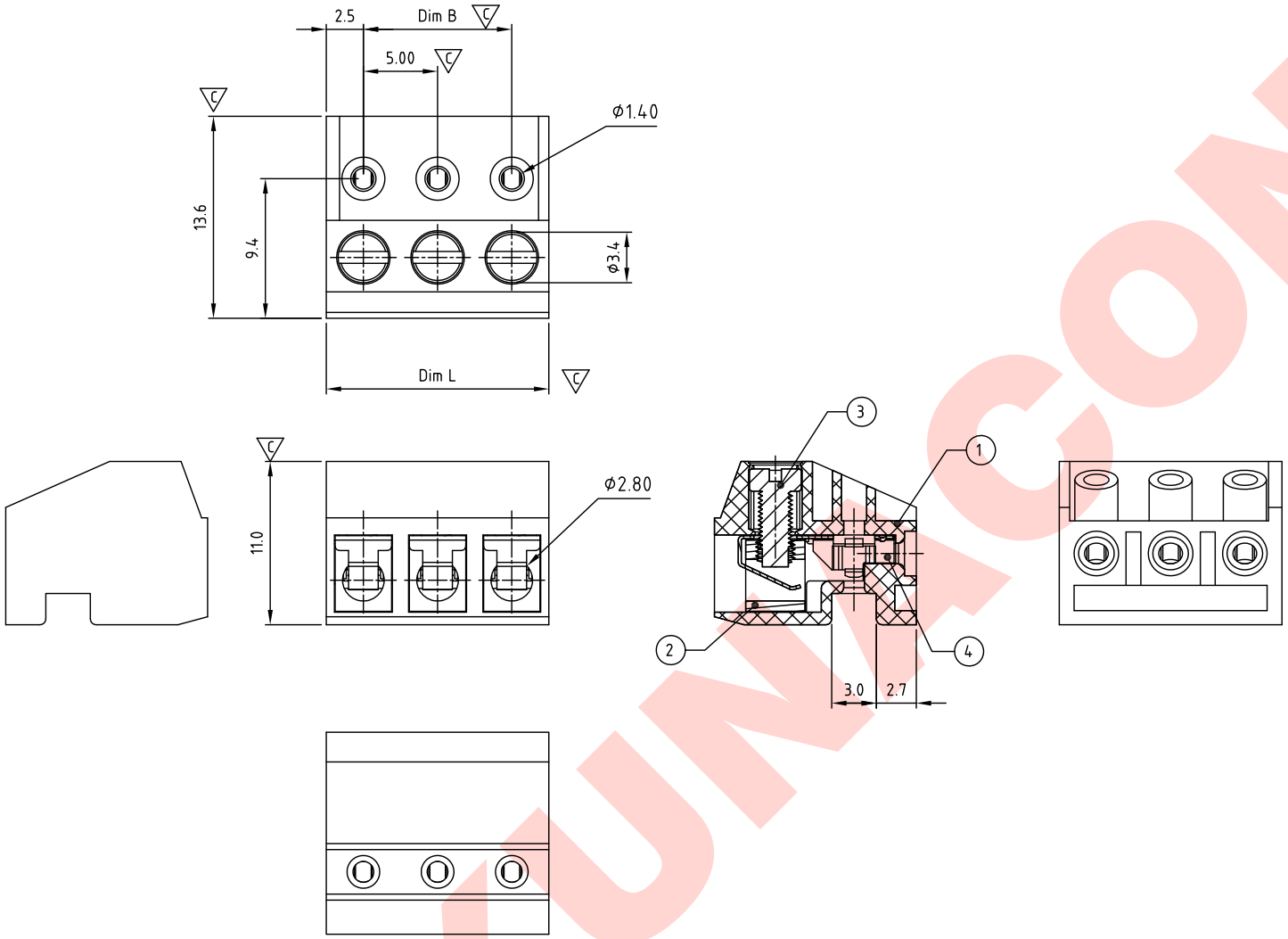

Technical data

1.Nominal voltage: 300V/14A (IEC 250V/12A)
PITCH:5.0mm

2.Connection capacity:
AWG 22-14 (0.34-1.5mm²)

3.Insulation Withstands Voltage:
AC 2500V/MIN

4.Insulation Resistace:
1000MΩor more at DC500V

5.Tightening torque:
4.0kgf.cm (0.4N.m)

6.Screw thread: M2.6

7.Stripping length: 5-6mm

8.Using temperature range:-40C°~115C°

9.Undimen sioned Tolerances:

Dim.L=Px5.0
Dim.B=(P-1)x5.0
P= number of poles(2-24p)

	Dim B	Dim L
0-30mm	±0.15	±0.20
over 30mm-60mm	±0.20	±0.25
over 60mm-90mm	±0.25	±0.30
over 90mm	±0.30	±0.40

10.Safety approval:

11.RoHS Compliance

12.Critical dimension: C

NASO500 xx x xxx
①②③

①Poles 02-24
②Color
0 Black 3 Orange 5 Green 6 Blue.....
③Custom
000 "K" logo 00K KUNACON logo

ITEM	NAME OF PART	MATERIAL	NOTES	Q"TY
4	WIRE GUARD	PhBz t=0.20mm		P
3	SCREW	STEEL	M2.6×0.4, Zn Plated	P
2	CAGE	BRASS	M2.6×0.4, Tin PLATED	P
1	BODY	PA66 UL94V-0	ALL COLOR	1

DWG.	WF. Zhang	DATE	2016.03.10	UNITS:	MM	SHEET:	1 OF 1
CHK.	WF. Zhang	DATE	2016.03.30	SCALE:	NONE 2.5:1 (:)	REV.: A	
APP.	Marvin Zhang	DATE	2016.03.30	TITLE:	NA-S500 Series Solid block "-" slot type 2-24p		
				PART NO.	NASO500xxxxxx		
				DWG NO.	NA-S500-B001		

Tolerance
X. ±0.50
X.X ±0.30
X.XX ±0.10
X° ±1°

KUNA Contact Technology Co, Ltd
http://www.kunacon.com

SIGN	DESCRIPTION	CHK.	DATE
1			

KUNACON