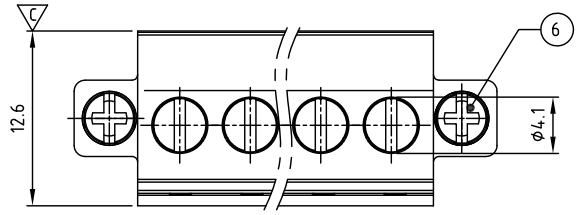

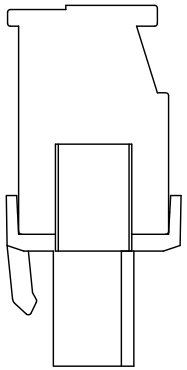

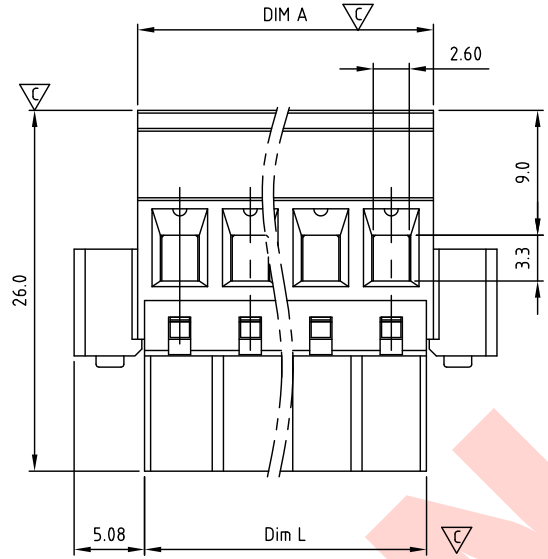

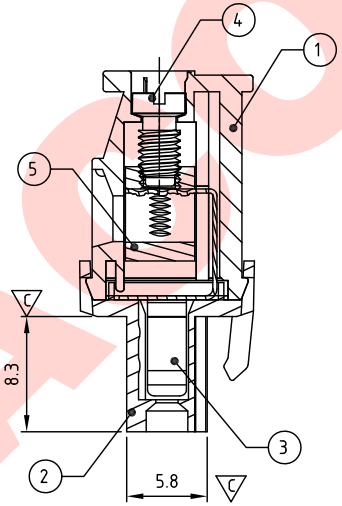

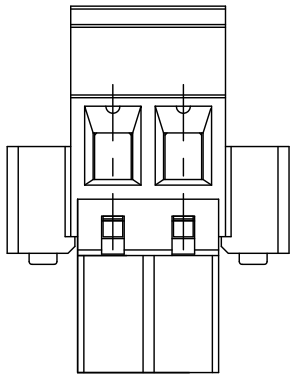

2p

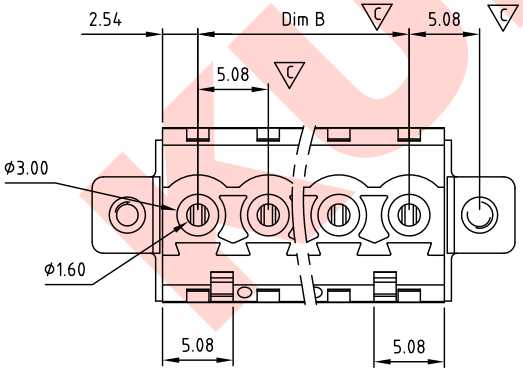

Technical data

1.Nominal voltage: 300V/15A (IEC 320V/12A)
PITCH:5.08mm

2.Connection capacity:
AWG 30-12 (0.2-2.5mm²)

3.Insulation Withstands Voltage:
AC 1600V/MIN / 2500V/MIN

4.Insulation Resistace:
1000MΩor more at DC500V

5.Tightening torque:
5kgf.cm (0.5N.m / 4.3 Lb-in)

6.Screw thread: M3

7.Stripping length: 6-7mm

8.Using temperature range:-40C°~115C°

9.Undimen sioned Tolerances:

Dim.L=Px5.08
Dim.B=(P-1)x5.08
Dim.A=(P-1)x5.08+6.08
P= number of poles

	Dim B	Dim L
0-30mm	±0.15	±0.20
over 30mm-60mm	±0.20	±0.25
over 60mm-90mm	±0.25	±0.30
over 90mm	±0.30	±0.40

10.Safety approval:

11.RoHS Compliance

12.Critical dimension:

MBFW508 xx x xxx
①②③

①Poles 02-24
②Color
0 Black 3 Orange 5 Green 6 Blue 8 Gray.....
③Custom
000 K MARK 00K KUNACON MARK .....

ITEM	NAME OF PART	MATERIAL	NOTES	Q"TY
6	Flange screw	STEEL	M2.5×0.45, Zn Plated	2
5	CAGE	BRASS	M3.0×0.5, Ni PLATED	P
4	SCREW	STEEL	M3.0×0.5, Zn Plated	P
3	WIRE GUARD	BRONZE (PhBz)	TIN PLATED	P
2	DOWN BODY	PA66 UL94V-0		1
1	UP BODY	PA66 UL94V-0		1

SIGN	DESCRIPTION	CHK.	DATE
1			

DWG.	WF. Zhang	DATE	2016.03.10	UNITS:	MM	SHEET:	1 OF 1
CHK.	WF. Zhang	DATE	2016.03.30	SCALE:	NONE 2.5:1 (:)	REV.: A	
APP.	Marvin Zhang	DATE	2016.03.30	TITLE:	MB-FW508 Series W/Flange "-" Slot screw type		
				PART NO.	MBFW508xxxxxx		
				DWG NO.	MB-F508-B002		

KUNA Contact Technology Co, Ltd
http://www.kunacon.com

Tolerance

X.	±0.50
X.X	±0.30
X.XX	±0.10
X°	±1°

KUNACON